MODEL-BASED SOFTWARE DEVELOPMENT

LECTURE VI.

OPTIMIZATION, OBFUSCATION, CODE GENERATION

Dr. Gergely Mezei,
Dr. Ferenc Somogyi,

Norbert Somogyi

THE CLASSIC PHASES OF COMPILATION

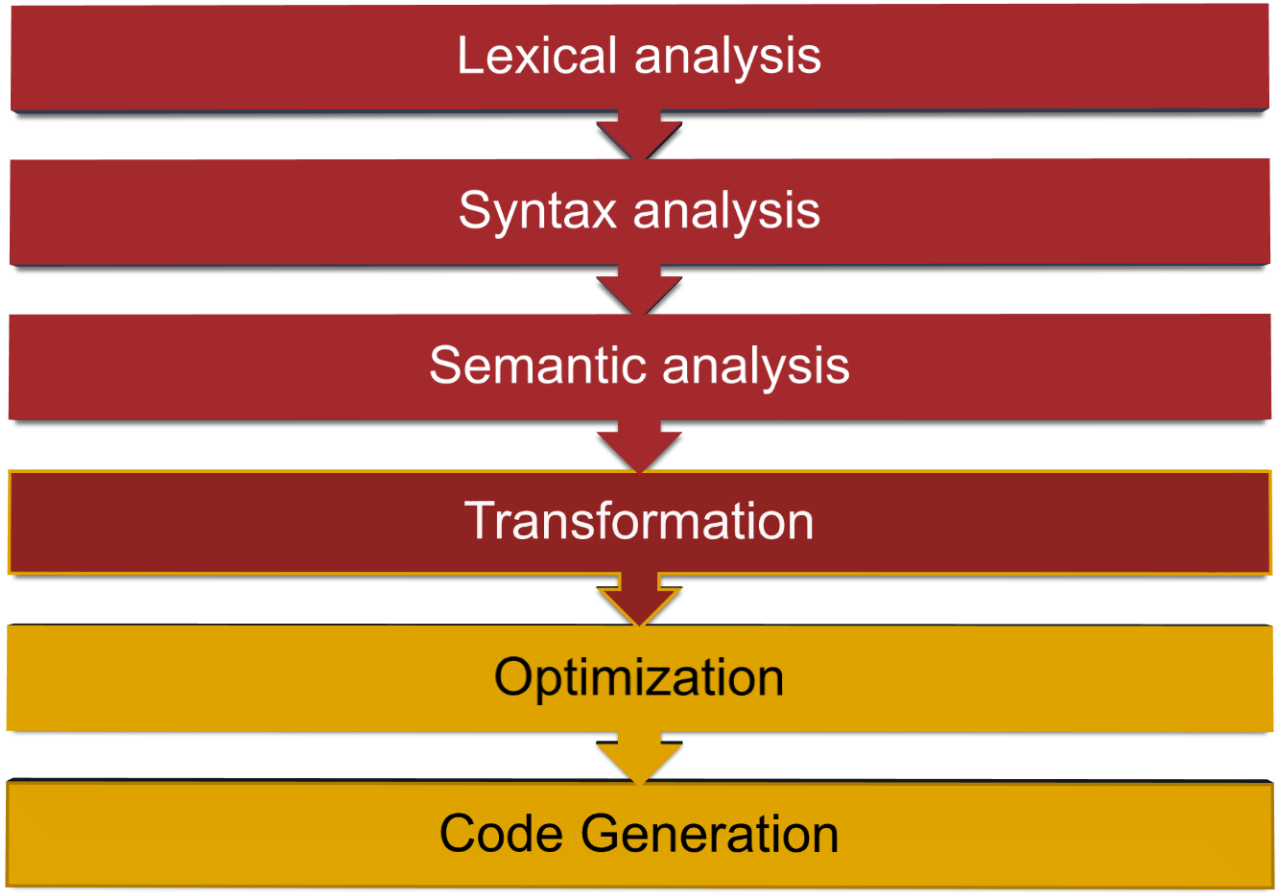

TODAY’S AGENDA

I. OPTIMIZATION

II. OBFUSCATION

III. CODE GENERATION

IV. EDITOR SUPPORT

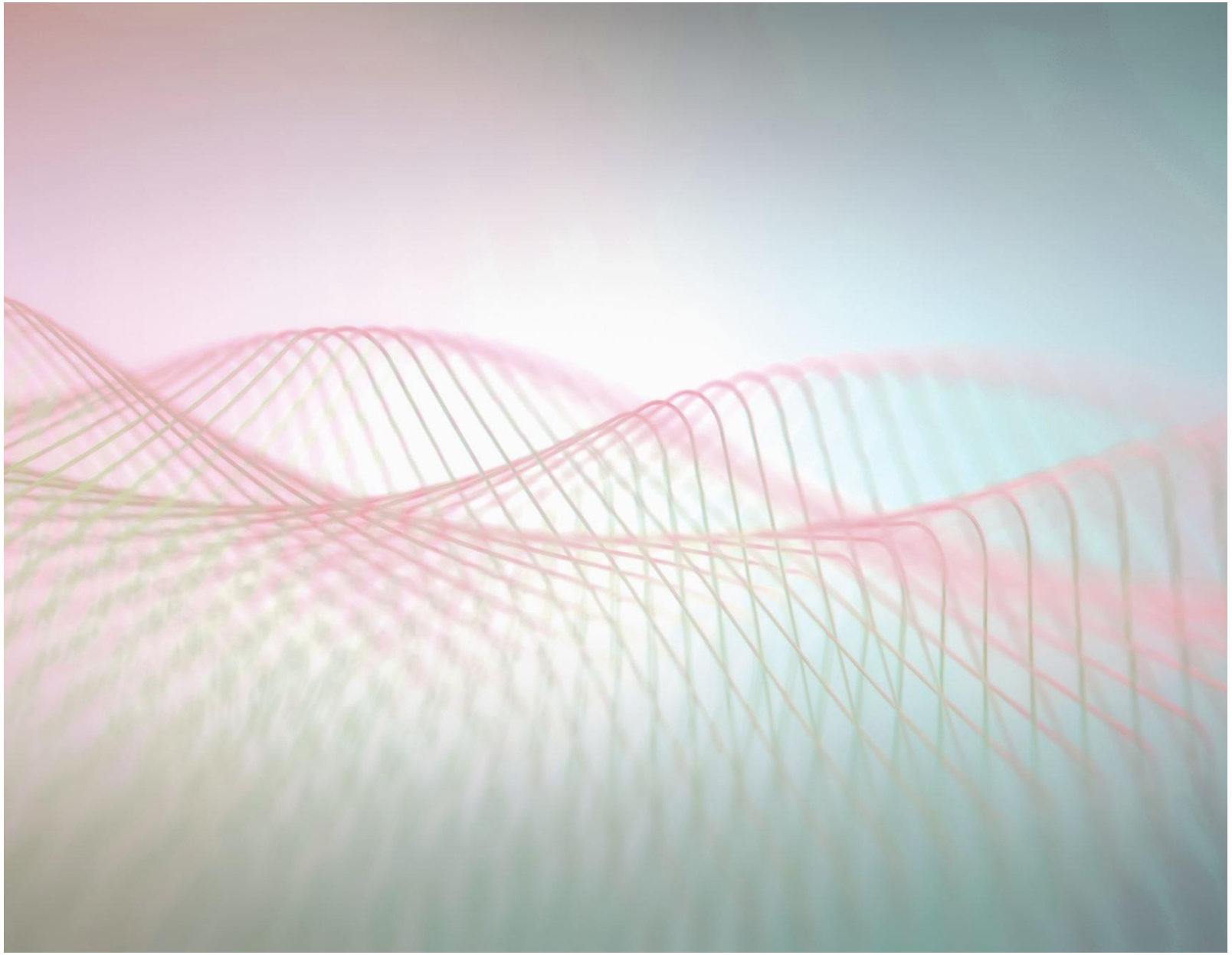

DATA-FLOW OPTIMIZATION

DATA-FLOW OPTIMIZATION

- Common subexpression elimination
- Constant/copy propagation
- Available expression analysis
- Dead code elimination
- Live-variable analysis

Only between basic blocks (local)!

COMMON SUBEXPRESSION ELIMINATION

- Avoid computing the same expression twice
  - If the operands have not changed and the operation is free of side effects

```
…
  a = b ⊙ c + 5
  e = (b ⊙ c) * 2
…
```

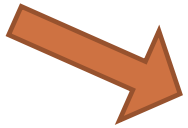

```
…
  tmp = b ⊙ c
  a = tmp + 5
  e = tmp * 2
…
```

CONSTANT PROPAGATION

- If a variable is assigned a constant value, then the variable can be switched with the value

```
…
  a = 7
  b = a ⊙ 3
  …
  if (a > 4) { write(".”); }
…
```

```
…
  a = 7
  b = 7 ⊙ 3
  …
  write(".”);
…
```

COPY PROPAGATION

- If two variables have the same value, they can be switched

```
…
  a = b ⊙ c
  d = a
  e = d * 5 + 8
…
```

```
…
  a = b ⊙ c
  d = a
  e = a * 5 + 8
…
```

OPTIMIZATION - EXAMPLE

```
…
b = a * a;
c = a * a;
d = b + c;
e = 1;
f = b + b;
g = f * e;
…
```

AVAILABLE EXPRESSION ANALYSIS

- *Available expression:* if there exists a variable that contains the value of the expression, then the expression can be switched with the variable
- Available expression analysis
  - Start with an empty set
  - For each a = b $\odot$ c expression
    - Remove expressions that contain *a*
    - Add the expression *a*= *b* $\odot$ *c*

AVAILABLE EXPRESSION ANALYSIS

```
a = b;

c = b;

d = a + b;

e = a + b;

d = b;

f = a + b;
```

AVAILABLE EXPRESSION ANALYSIS

```
{}
a = b;

c = b;

d = a + b;

e = a + b;

d = b;

f = a + b;
```

AVAILABLE EXPRESSION ANALYSIS

```
{}
a = b;
{a = b}
c = b;

d = a + b;

e = a + b;

d = b;

f = a + b;
```

AVAILABLE EXPRESSION ANALYSIS

{ }

```
a = b;
```

{ a = b }

```
c = b;
```

{ a = b, c = b }

```
d = a + b;

e = a + b;

d = b;

f = a + b;
```

AVAILABLE EXPRESSION ANALYSIS

{ }

```
a = b;
```

{ a = b }

```
c = b;
```

{ a = b, c = b }

```
d = a + b;
```

{ a = b, c = b, d = a + b }

```
e = a + b;

d = b;

f = a + b;
```

AVAILABLE EXPRESSION ANALYSIS

{ }

```
a = b;
```

{ a = b }

```
c = b;
```

{ a = b, c = b }

```
d = a + b;
```

{ a = b, c = b, d = a + b }

```
e = a + b;
```

{ a = b, c = b, d = a + b, e = a + b }

```
d = b;


f = a + b;
```

AVAILABLE EXPRESSION ANALYSIS

{ }

```
a = b;
```

{ a = b }

```
c = b;
```

{ a = b, c = b }

```
d = a + b;
```

{ a = b, c = b, d = a + b }

```
e = a + b;
```

{ a = b, c = b, d = a + b, e = a + b }

```
d = b;
```

{ a = b, c = b, d = b, e = a + b }

```
f = a + b;
```

AVAILABLE EXPRESSION ANALYSIS

{ }

```
a = b;
```

{ a = b }

```
c = b;
```

{ a = b, c = b }

```
d = a + b;
```

{ a = b, c = b, d = a + b }

```
e = a + b;
```

{ a = b, c = b, d = a + b, e = a + b }

```
d = b;
```

{ a = b, c = b, d = b, e = a + b }

```
f = a + b;
```

{ a = b, c = b, d = b, e = a + b, f = a + b }

AVAILABLE EXPRESSION ANALYSIS

{ }

```
a = b;
```

{ a = b }

```
c = a;
```

{ a = b, c = b }

```
d = a + b;
```

{ a = b, c = b, d = a + b }

```
e = a + b;
```

{ a = b, c = b, d = a + b, e = a + b }

```
d = b;
```

{ a = b, c = b, d = b, e = a + b }

```
f = a + b;
```

{ a = b, c = b, d = b, e = a + b, f = a + b }

AVAILABLE EXPRESSION ANALYSIS

{ }

```
a = b;
```

{ a = b }

```
c = a;
```

{ a = b, c = b }

```
d = a + b;
```

{ a = b, c = b, d = a + b }

```
e = d;
```

{ a = b, c = b, d = a + b, e = a + b }

```
d = b;
```

{ a = b, c = b, d = b, e = a + b }

```
f = a + b;
```

{ a = b, c = b, d = b, e = a + b, f = a + b }

AVAILABLE EXPRESSION ANALYSIS

{ }

```
a = b;
```

{ a = b }

```
c = a;
```

{ a = b, c = b }

```
d = a + b;
```

{ a = b, c = b, d = a + b }

```
e = d;
```

{ a = b, c = b, d = a + b, e = a + b }

```
d = a;
```

{ a = b, c = b, d = b, e = a + b }

```
f = a + b;
```

{ a = b, c = b, d = b, e = a + b, f = a + b }

AVAILABLE EXPRESSION ANALYSIS

{ }

```
a = b;
```

{ a = b }

```
c = a;
```

{ a = b, c = b }

```
d = a + b;
```

{ a = b, c = b, d = a + b }

```
e = d;
```

{ a = b, c = b, d = a + b, e = a + b }

```
d = a;
```

{ a = b, c = b, d = b, e = a + b }

```
f = e;
```

{ a = b, c = b, d = b, e = a + b, f = a + b }

DEAD CODE ELIMINATION

- If the left side of an assignment is never read, then the assignment can be removed

```
…
  a = b ⊙ c
  d = a
  e = a * 5 + 8
…
```

…
a = b ⊙ c
~~d = a~~
e = a * 5 + 8
…

LIVENESS ANALYSIS

- Dead code analysis: **liveness analysis**
- A variable is *live* at a given point of the program, if its value is read at least once before being overwritten
- Dead code elimination using liveness analysis:
  - For each variable, liveness analysis
  - Delete every assignment that has a non-live variable on the left side
- Compute the statements of the basic block in reverse-order
- Some variables may be considered to be live by default (e.g. if it influences output)

LIVENESS ANALYSIS

```
a = b;

c = a;

d = a + b;

e = d;

d = a;

f = e;
```

LIVENESS ANALYSIS

```
a = b;

c = a;

d = a + b;

e = d;

d = a;

f = e;
```

{ b, d }

LIVENESS ANALYSIS

```
a = b;

c = a;

d = a + b;

e = d;

d = a;
```

{ b, d, e }

```
f = e;
```

{ b, d }

LIVENESS ANALYSIS

```
a = b;

c = a;

d = a + b;

e = d;
```

{ a, b, e }

```
d = a;
```

{ b, d, e }

```
f = e;
```

{ b, d }

LIVENESS ANALYSIS

```
a = b;

c = a;

d = a + b;
```

{ a, b, d }

```
e = d;
```

{ a, b, e }

```
d = a;
```

{ b, d, e }

```
f = e;
```

{ b, d }

LIVENESS ANALYSIS

```
a = b;
```

```
c = a;
```

{ a, b }

```
d = a + b;
```

{ a, b, d }

```
e = d;
```

{ a, b, e }

```
d = a;
```

{ b, d, e }

```
f = e;
```

{ b, d }

LIVENESS ANALYSIS

```
a = b;
```

{ a, b }

```
c = a;
```

{ a, b }

```
d = a + b;
```

{ a, b, d }

```
e = d;
```

{ a, b, e }

```
d = a;
```

{ b, d, e }

```
f = e;
```

{ b, d }

LIVENESS ANALYSIS

```
{ b }
a = b;
{ a, b }
c = a;
{ a, b }
d = a + b;
{ a, b, d }
e = d;
{ a, b, e }
d = a;
{ b, d, e }
f = e;
{ b, d }
```

LIVENESS ANALYSIS

```
{ b }
a = b;
{ a, b }
c = a;
{ a, b }
d = a + b;
{ a, b, d }
e = d;
{ a, b, e }
d = a;
{ b, d, e }


{ b, d }
```

LIVENESS ANALYSIS

```
{ b }
a = b;
{ a, b }


{ a, b }
d = a + b;
{ a, b, d }
e = d;
{ a, b, e }
d = a;
{ b, d, e }


{ b, d }
```

LIVENESS ANALYSIS

```
a = b;

d = a + b;

e = d;

d = a;
```

LIVENESS ANALYSIS

```
a = b;

d = a + b;

e = d;

d = a;
```

{ b, d }

LIVENESS ANALYSIS

```
a = b;

d = a + b;

e = d;
```

{ a, b }

```
d = a;
```

{ b, d }

LIVENESS ANALYSIS

```
a = b;

d = a + b;
```

{ a, b, d }

```
e = d;
```

{ a, b }

```
d = a;
```

{ b, d }

LIVENESS ANALYSIS

```
a = b;
```

{ a, b }

```
d = a + b;
```

{ a, b, d }

```
e = d;
```

{ a, b }

```
d = a;
```

{ b, d }

LIVENESS ANALYSIS

```
{ b }
a = b;
{ a, b }
d = a + b;
{ a, b, d }
e = d;
{ a, b }
d = a;
{ b, d }
```

LIVENESS ANALYSIS

```
{ b }
a = b;
{ a, b }
d = a + b;
{ a, b, d }

{ a, b }
d = a;
{ b, d }
```

LIVENESS ANALYSIS

```
a = b;

d = a + b;

d = a;
```

LIVENESS ANALYSIS

```
a = b;

d = a + b;

d = a;
```

{ b, d }

LIVENESS ANALYSIS

```
a = b;

d = a + b;
```

{ a, b }

```
d = a;
```

{ b, d }

LIVENESS ANALYSIS

```
a = b;
```

{ a, b }

```
d = a + b;
```

{ a, b }

```
d = a;
```

{ b, d }

LIVENESS ANALYSIS

```
{ b }
a = b;
{ a, b }

d = a + b;
{ a, b }

d = a;
{ b, d }
```

LIVENESS ANALYSIS

{ b }

```
a = b;
```

{ a, b }

{ a, b }

```
d = a;
```

{ b, d }

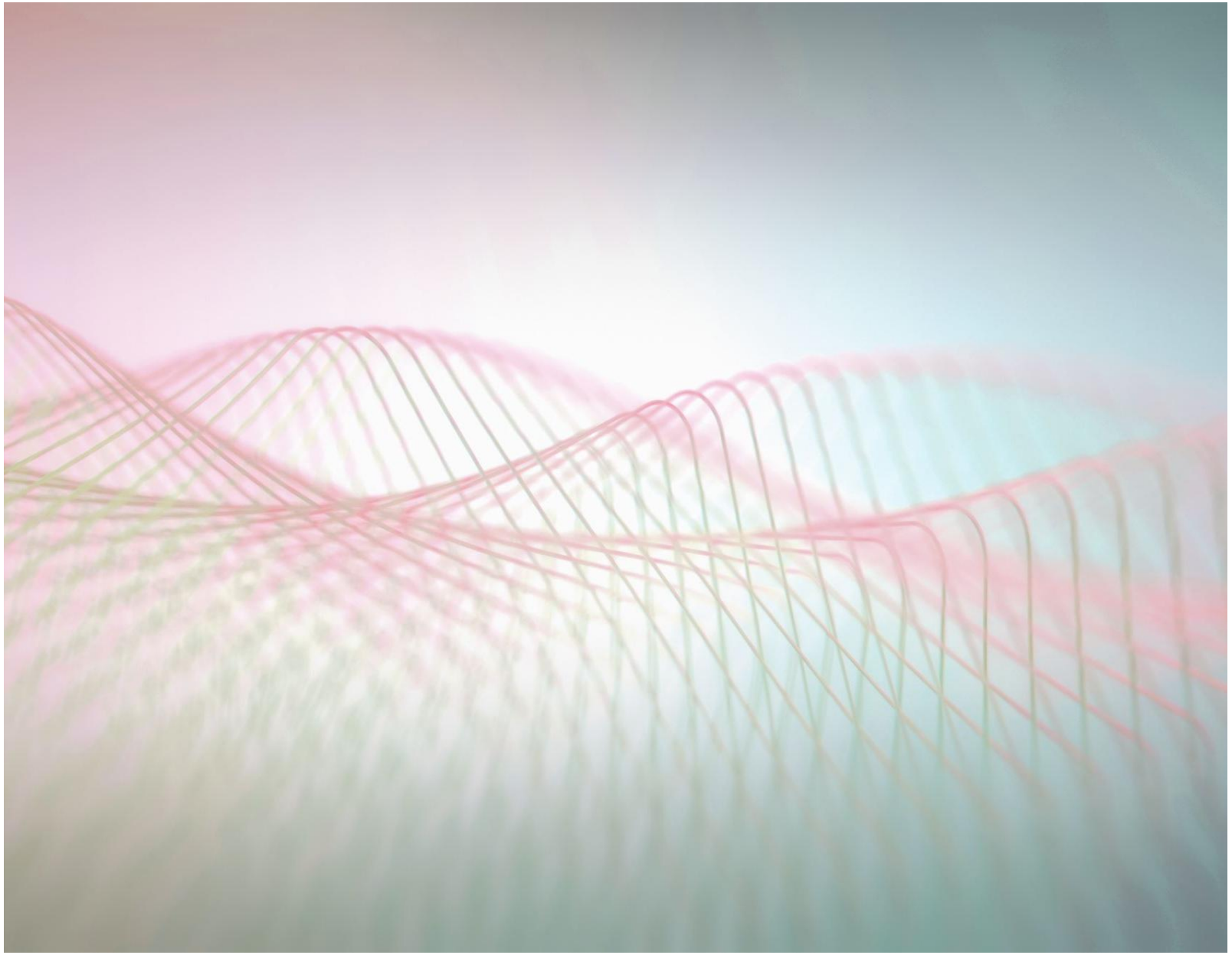

CODE MOTION

CODE MOTION

- Code sinking
- Code factoring
- Code scheduling
- Loop invariant code motion

CODE SINKING

- Execute statements only where they are necessary
  - Similar to dead code, but can be used for statements with side effects as well

```
…
  b=5;
  if (a>5) { write(b); } else { write("none"); }
…
```

```
…
  if (a>5) { b=5; write(b); } else { write("not ok"); }
…
```

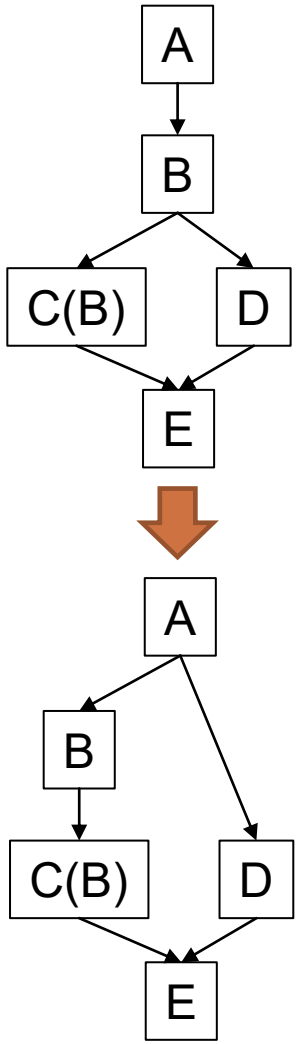

CODE FACTORING

- Execute common statements in the common execution path
  - The “reverse” of code sinking
  - Often, the code is factorized into smaller fragments

```
…
  if (a>b) { c=5; write(c); } else { write(“none”); c=5; }
…
```

```
…
  c=5;
  if (a>b) { write(c); } else { write(“none”); }
…
```

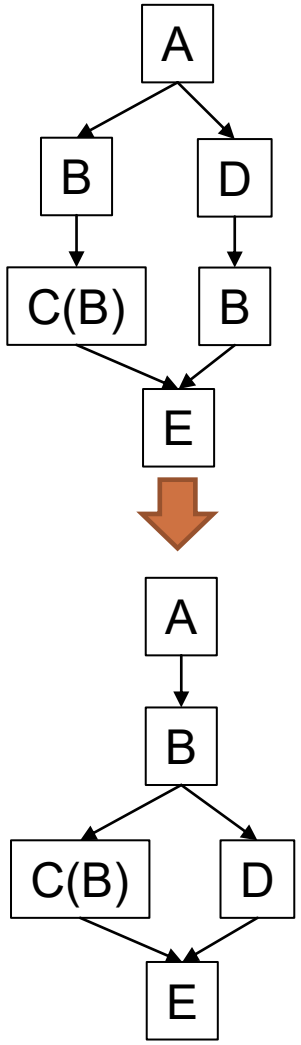

CODE SCHEDULING

- Avoid long waiting queues!
  - > Parallel / effective execution can be faster in a different order of statements
  - > Optimize dependency graph

```
…
  a=f(); b=a+1; c=f2(a); d=a+c; e=f3(); f=e+a;
…
```

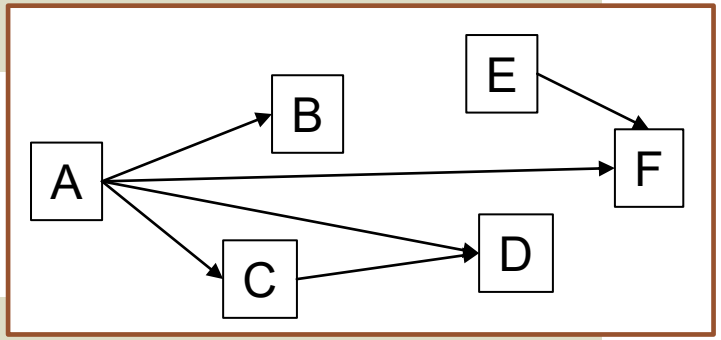


```
…
  a=f(); e=f3(); c=f2(a); b=a+1; f=e+a; d=a+c;
…
```

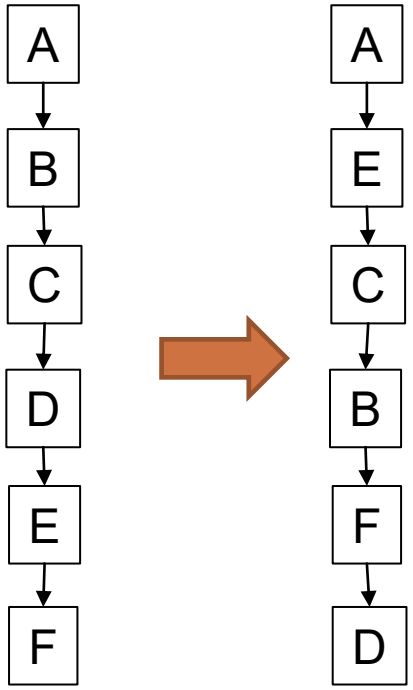

LOOP INVARIANT CODE MOTION

- Move invariant code before the loop!
  - > Unnecessary to compute in every iteration

```
…
  int i = 0;
  while (i < j) {
    a = b + c;
    d[i] = i + a * a;
    ++i;
}
…
```

```
…
  int i = 0;
  a = b + c;
  while (i < j) {
    d[i] = i + a * a;
    ++i;
}
…
```

LOOP INVARIANT CODE MOTION

- Move invariant code before the loop!
  - Can also move partly invariant code

```
…
  int i = 0;
  while (i < j) {
    a = b + c;
    d[i] = i + a * a;
    ++i;
}
…
```

```
…
  int i = 0;
  a = b + c;
  int const a' = a * a;
  while (i < j) {
    d[i] = i + a';
    ++i;
}
…
```

LOOP INVARIANT CODE MOTION

- Move invariant code before the loop!
  - It is not guaranteed that the program enters the loop at all!
  - Must be handled

```
…
  int i = 0;
  while (i < j) {
    a = b + c;
    d[i] = i + a * a;
    ++i;
}
…
```

```
…
  int i = 0;
  if (i<j) {
    a = b + c;
    int const a' = a * a;
    while (i < j) {
      d[i] = i + a';
      ++i;
   }
}…
```

LOOP INVARIANT CODE MOTION

- Move invariant code before the loop!
  - > What if the loop condition has a side effect?

```
…
  int i = 0;
  while (fn(i)) {
    a = b + c;
    d[i] = i + a * a;
    ++i;
}
…
```

```
…
  int i = 0;
  if (fn(i)) {
    a = b + c;
    int const a' = a * a;
    while (fn(i)) {
      d[i] = i + a';
      ++i;
   }
}…
```

LOOP INVARIANT CODE MOTION

- Move invariant code before the loop!
  - > What if the loop condition has a side effect?

```
…
  int i = 0;
  while (fn(i)) {
    a = b + c;
    d[i] = i + a * a;
    ++i;
}
…
```

```
…
  int i = 0;
  if (fn(i)) {
    a = b + c;
    int const a' = a * a;
    do {
      d[i] = i + a';
      ++i;
    } while (fn(i));
}…
```

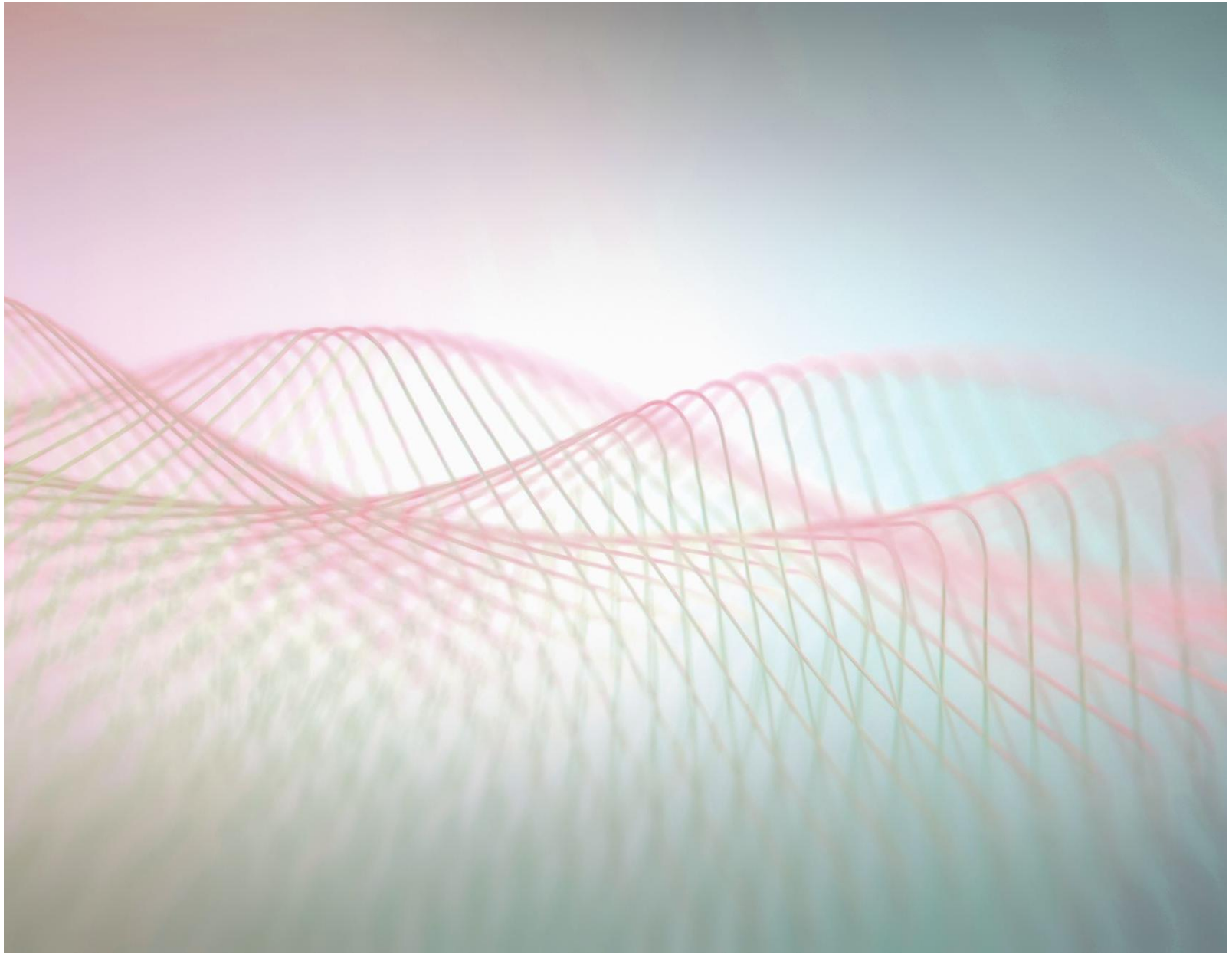

ADDITIONAL OPTIMIZATION TECHNIQUES

USING INLINE FUNCTIONS

- Inline function – instead of a function call, copy the code of the function
  - Manual or automatic
  - Not identical to macros (where the source code is changed before compilation)
- Advantages
  - Faster than a function call (function pointers, stack, registers)
  - The scope of local/global optimization increases
    - Moving invariant code (similar to loops)
    - Register optimization
- Disadvantages
  - Increased memory costs (duplicate data structures)
  - Operational cache overflow possible

REGISTER ALLOCATION

- Register – fast, easy to access, small container
  - Limited (< 32)
  - Would have to load every live variable
  - When no more space → RAM
  - Registers are sometimes not independent (e.g. 32 bit register may be used as 2x16 bits)
- What to remove, what to keep in the registers?
  - NP complete problem (can be reduced to graph coloring, color = register)
  - Rematerialization instead of storing (e.g. constant integer values)

ADDITIONAL TECHNIQUES

- Elementary techniques
  - Eliminate unreachable code
  - Unfolding and merging loops
  - Omit index boundary checking
- Platform-dependent (e.g. operating system, CPU architecture) optimization
- Domain-dependent optimization

TODAY’S AGENDA

I. OPTIMIZATION

II. OBFUSCATION

III. CODE GENERATION

IV. EDITOR SUPPORT

OBFUSCATION

- Goal: make it harder to…
  - Understand how the program works
  - Reverse engineer the program (from machine/IL code)
  - Analyse the program
- Mostly as a measure of defense
  - Against security issues
  - Against theft / copy
- Perfect defense does not exist; can only make reverse engineering harder, not impossible!
- How does it work?
  - Similar to optimization
  - Largely dependent on our limitations (time, importance of protection against reverse engineering etc.)

TECHNIQUES

- Name obfuscation (lexical transformation)
- Data obfuscation (modifying data structures)
- Control flow obfuscation
- Debug information obfuscation

NAME OBFUSCATION

- Replace meaningful identifiers (classes, methods, variables, functions etc.) with meaningless text
- Restrictions
  - Names of built-in classes and API-s are fixed
  - Names of classes to be serialized are fixed
  - Tricky in case of native access and reflection

DATA OBFUSCATION

- Change the way data is stored in the memory
- Techniques
  - Change encoding
  - Data aggregation (arrays, collections)
  - Change the role of data (e.g. local vs global)

EXAMPLE: NAME AND DATA OBFUSCATION

```
function foo( arg1)
{
  var myVar1 =  "some string";  //first comment
  var intVar =  24 *  3600; //second comment
  /* here is
       a long multi-line comment . . . */
  document. write( "vars are:" +  myVar1 +  " " +  intVar +  " " +  arg1) ;
} ;
```

```
function z001c775808( z3833986e2c) { var z0d8bd8ba25=
  "\x73\x6f\x6d\x65\x20\x73\x74\x72\x69\x6e\x67"; var z0ed9bcbcc2=
  (0x90b+785-0xc04)* (0x1136+6437-0x1c4b); document. write(
  "\x76\x61\x72\x73\x20\x61\x72\x65\x3a"+ z0d8bd8ba25+ "\x20"+
  z0ed9bcbcc2+ "\x20"+ z3833986e2c);};
```

EXAMPLE: NAME AND DATA OBFUSCATION

- Variables, identifiers:
  - foo → z001c775808
  - arg1 → z3833986e2c
  - myvar1 → z0d8bd8ba25
  - intvar → z0ed9bcbcc2
- Integer representation:
  - 20 → (0x90b+785-0xc04)
  - 3600 → (0x1136+6437-0x1c4b)
- Printing:
  - “vars are” → \x76\x61\x72\x73\x20\x61\x72\x65\x3a
  - Space → \x20

```
function foo( arg1)
{
  var myVar1 =  "some string";
  //first comment
  var intVar =  24 *  3600;
  //second comment
  /* here is
        a long multi-line
  comment ... */
  document.write( "vars are:" +
  myVar1 +  " " +  intVar +  " "
  +  arg1) ;
} ;
```

```
function z001c775808( z3833986e2c) { var z0d8bd8ba25=
  "\x73\x6f\x6d\x65\x20\x73\x74\x72\x69\x6e\x67"; var z0ed9bcbcc2=
  (0x90b+785-0xc04)* (0x1136+6437-0x1c4b); document. write(
  "\x76\x61\x72\x73\x20\x61\x72\x65\x3a"+ z0d8bd8ba25+ "\x20"+
  z0ed9bcbcc2+ "\x20"+ z3833986e2c);};
```

CONTROL FLOW OBFUSCATION

- Change control flow
- Same result, but harder to understand
- Techniques
  - Modified control, e.g. inline methods instead of method calls
  - Change the order of statements
  - Change computations
    - Insert unreachable code
    - Insert unconditional jumps
    - Split statement blocks to conditional statements
    - Always true/false branches

EXAMPLE: CONTROL FLOW OBFUSCATION

```
public int CompareTo(Object o)
{
  int n = occurrences - ((WordOccurrence)o).occurrences;
  if (n == 0)
   {
      n = String.Compare(word,((WordOccurrence)o).word);
  }
   return(n);
 }
```

```
public virtual int _a(Object A_0)
{
  int local0; int local1;
  local0 = this.a - (c) A_0.a;
  if (local0 != 0) goto i0;
  goto i1;
  while (true) {
        return local1;
        i0: local1 = local0;}
  i1: local0 = System.String.Compare(this.b, (c) A_0.b); goto i0;
}
```

DEBUG INFORMATION OBFUSCATION

- Remove debug information
  - Stack trace
  - Line numbers
  - File names, etc.

TODAY'S AGENDA

I. OPTIMIZATION

II. OBFUSCATION

III. CODE GENERATION

IV. EDITOR SUPPORT

CODE GENERATION

- Code generation: generate executable code from the inner representation (optimized intermediate code) of the compiler
  - The target is not necessarily binary (machine) code!
- Based on the nature of the input
  - 3-address code (Three-Address Code, 3AC)
  - Syntax trees
  - etc.
- Based on the nature of the output
  - Machine code
  - Intermediate code (e.g. LLVM, IL)
  - High-level programming language code (transpiler)

CODE GENERATION – MACHINE CODE

- Code generation
  - Transform code to the operations supported by the target architecture
  - Manage register allocations – RegisterDescriptor + getReg
  - Address administration (address of variables, can change during runtime) – AddressDescriptor
- `x = y op z`
  - getReg call to get the address of the result (L)
  - Find the address of Y (AddressDescriptor), then copy: `MOV y L`
  - Find the address of Z (AddressDescriptor), then execute the operation: `OP z L`
  - Result in L, if L is a register, then the descriptor of x must be updated (contained by L)

CODE GENERATiON – MACHINE CODE

- The result of the generation can be executed directly
- Advantages
  - Optimal speed and size can be reached
  - Fast, can make full use of the nature of the architecture
  - Anything can be expressed, no language limitations
- Disadvantages
  - Low-level, difficult to write
  - Every check (e.g. stack overflow) has to be done manually
  - Debugging the generated code is difficult

CODE GENERATION – INTERMEDIATE CODE

- LLVM
  - Frontend: platform-independent SSA statement list
  - Backend: platform-dependent binary code
  - ~ “readable assembly”
  - Infinite virtual registers
  - Has its own platform-independent typesystem
  - Built-in optimization (e.g. dead code, common subexpression)

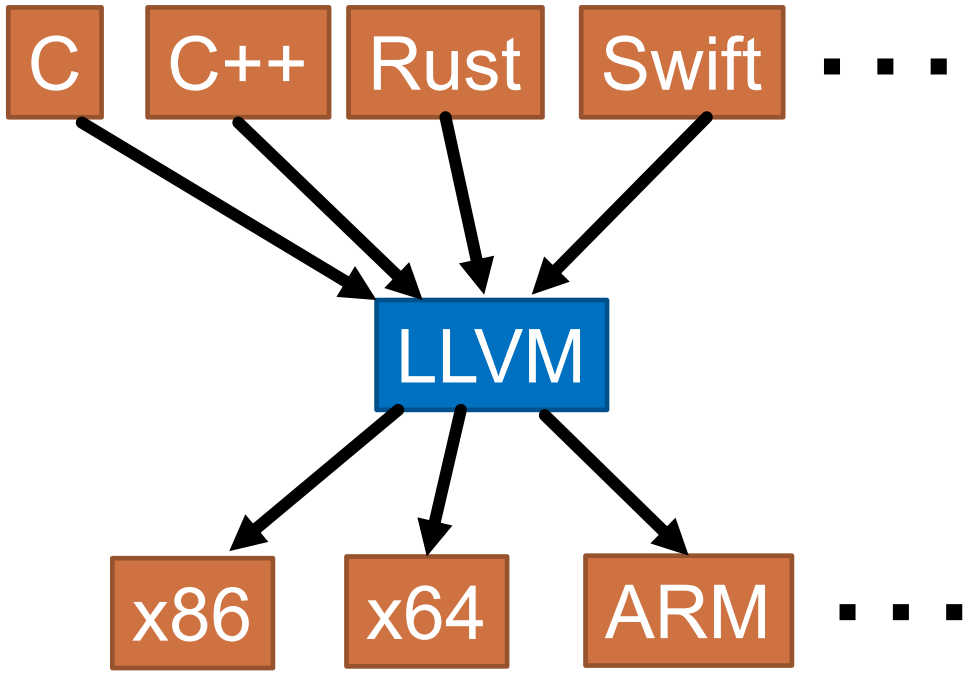

LLVM - EXAMPLE

```
function int factorial(int n){
  if (n==0) {
    1
  } else {
    n * factorial(n - 1)
  }
}
```

```
define i32 @factorial(i32) {

entry:
  %eq = icmp eq i32 %0, 0   // n == 0
  br i1 %eq, label %then, label %else

then:                       ; preds = %entry
 br label %ifcont

else:                       ; preds = %entry
 %sub = sub i32 %0, 1                  // n - 1
 %2 = call i32 @factorial(i32 %sub)    // factorial(n-1)

 %mult = mul i32 %0, %2             // n * factorial(n-1)
 br label %ifcont

ifcont:                     ; preds = %else, %then
 %iftmp = phi i32 [ 1, %then ], [ %mult, %else ]
 ret i32 %iftmp
}
```

CODE GENERATION – INTERMEDIATE CODE

- Common Intermediate Language (CIL)
  - Object-oriented (objects, methods, attributes)
  - Stack-based (instead of registers)
  - Platform-independent
  - Capable of storing meta-data
- Run by a Just-in-Time (JIT) compiler
  - Ahead-of-time compilation is available
  - Security checks
- Can be transformed back to high-level programming languages using Disassembler

IL - EXAMPLE

```
function int factorial(int n){
  if (n==0) {
    return 1
  } else {
    n * factorial(n - 1)
  }
}
```

```
.method public hidebysig
 instance int32 factorial (int32 n) cil managed {
  // Method begins at RVA 0x2064
  // Code size 31 (0x1f)
  .maxstack 4
  .locals init ([0] bool,[1] int32)

  // {
  IL_0000: nop

  // if (n == 0)
  IL_0001: ldarg.1
  IL_0002: ldc.i4.0
  IL_0003: ceq
  IL_0005: stloc.0
  IL_0006: ldloc.0
  IL_0007: brfalse.s IL_000e
```

```
// return 1;
  IL_0009: nop
  IL_000a: ldc.i4.1
  IL_000b: stloc.1

  // (no C# code)
  IL_000c: br.s IL_001d

  // return n * factorial(n - 1);
  IL_000e: nop
  IL_000f: ldarg.1
  IL_0010: ldarg.0
  IL_0011: ldarg.1
  IL_0012: ldc.i4.1
  IL_0013: sub
  IL_0014: call instance int32
                          Host::factorial(int32)

  IL_0019: mul
  IL_001a: stloc.1

  // (no C# code)
  IL_001b: br.s IL_001d
  IL_001d: ldloc.1
  IL_001e: ret
} // end of method Host::factorial
```

CODE GENERATION – INTERMEDIATE CODE

- Advantages
  - Easier to generate than machine-code and easier to read for humans
  - Less technical difficulties (e.g. register allocation)
  - Can be very effective, because it is low level
  - Can compile to multiple platforms
- Disadvantages
  - A special compiler is necessary
  - Generation of the target code (intermediate code) is not easy

CODE GENERATION - TRANSPILER

- Transpiler: compile to a different, typically higher-level target language
  - Traverse the annotated syntax tree and generate code using templates
  - Typical solution: every AST element is capable of generating its own target code, hierarchic decomposition
  - Template-based code generation is possible
  - Multiple transpilers can be “chained” after each other

```
if (x > 5) then
begin
 while (y < z) do
  begin
   y := x;
  end
end
```

```
if (x > 5)
 while (y < z) {
  y = x;

 }
```

CODE GENERATION - TRANSPILER

- Advantages
  - Easy to create the code generator
  - Machine code is generated by compiling the code written in the target language
    - The compiler of the target language can be reused
    - Optimization done externally (e.g. Visual Studio, GCC)
    - Security checks (e.g. memory segmentation faults)
  - Easier to verify the semantics of the generated code (C# vs. Assembly)
  - The generated code is easy to integrate with existing applications / tools
- Disadvantages
  - Cannot be optimized as well as machine code
  - The capabilities of the target language restrict the possibilities

AFTER CODE GENERATION: LINK AND BUILD

- The output of code generation can not always be run on its own: multiple modules (‘object’ file)
- Link: concatenate object files into a runnable format
  Build: transform linked files into an executable
- Linking – advantages
  - Instead of one monolithic file, uses multiple smaller (less complex)
  - Easier error management and incremental compilation
  - Compiled object files can be reused

TODAY’S AGENDA

I. OPTIMIZATION

II. OBFUSCATION

III. CODE GENERATION

IV. EDITOR SUPPORT

TEXTUAL EDITORS

- Textual languages – good tool support
  - Could also use Notepad, but not recommended ☺
  - More advanced text editors exist (e.g.Vim, Emacs, Atom)
    - Integrating these with a custom language can be problematic
  - Integrated development environments (IDE)
    (e.g. VSCode, Eclipse, Eclipse Theia, IntelliJ IDEA, NetBeans)
    - Many of these are extendable (plugins, extensions, etc.), which makes integration easier
- Integrate the language and the editor
  - In accordance with the steps of compilation (mainly during semantic analysis)

TEXTUAL EDITORS

- Editor functions
  - Syntax highlighting
  - Code completion
  - Signal errors
  - Support refactoring
  - Folding
  - Quick fixes
  - Etc.

```
1   //app/database.ts
2   import { Tweet, TweetWithId } from "./models";
3   import { v4 as uuidv4 } from 'uuid';
4
5   function generateTweetId() : string {
6       return uuid();
7   }                 uuidv4                    import uuidv4
8
9 > export class Database {···
40  }
```

```
1   Device Window can be OPEN, SHUT
2   Device Heating can be ON, OFF
3
4   Rule 'Close Window, when heating turned on'
5   when Heating.ON
6   then Window.SHUT
7
8   Rule 'Switch off heating, when windows gets opened'
9   when Window.OPEN
10  then Heating.OFF
        Heating.OFF        State
        Heating.ON         State
        Window.OPEN        State
        Window.SHUT        State
```

Source:
https://www.eclipse.org/Xtext/

Language Server Protocol (LSP)

- JSON-RPC based protocol
- Communication between textual editors and language servers
- Support for main editor features
  - Syntax highlighting, signal errors, code completion, refactoring etc.
- Why is this useful?
  - Write once, connect with multiple editors
  - Many popular editors support it (e.g. VSCode, Monaco, Eclipse IDE, Eclipse Theia)
  - For many languages, a Language Server implementation already exists
    - https://langserver.org/

Language Server Protocol (LSP)

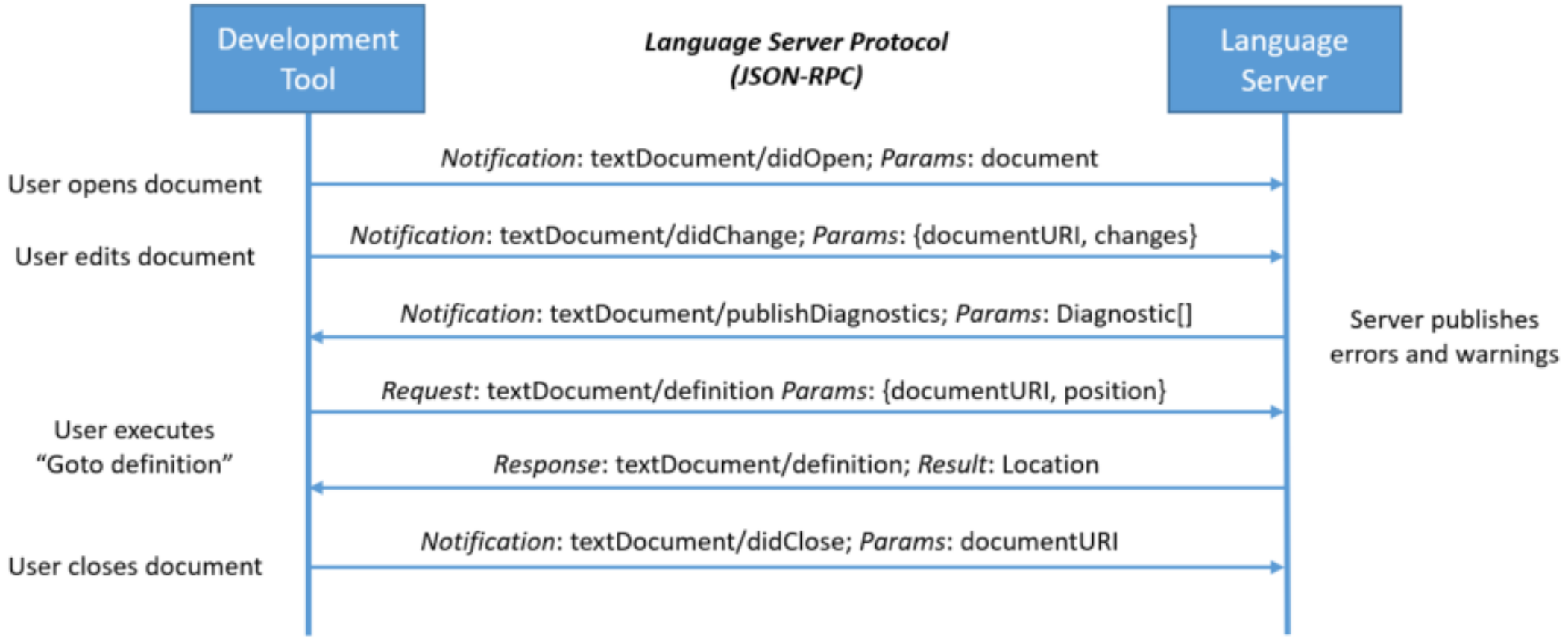

Source: https://microsoft.github.io/language-server-protocol/overviews/lsp/overview/

PROJECTIONAL EDITORS

- Traditional editors
  - Discussed so far
  - Well-tried and widespread
  - Any textual editor can be used (with recommended editor functions)
- Projectional editors
  - The elements of the syntax trees are indirectly visualized
  - *Building syntax trees is not needed!*
  - Special tooling is required
  - E.g. Jetbrains MPS, Gentleman

PROJECTIONAL EDITORS - EXAMPLE

- Semantic model
  - Lower and upper bounds of the integral
  - Integrand

- Concrete expression: $\int_{-\infty}^{\infty} e^{-x^2} dx$
- Can be mapped directly to the semantic model

PROJECTIONAL EDITORS – JETBRAINS MPS

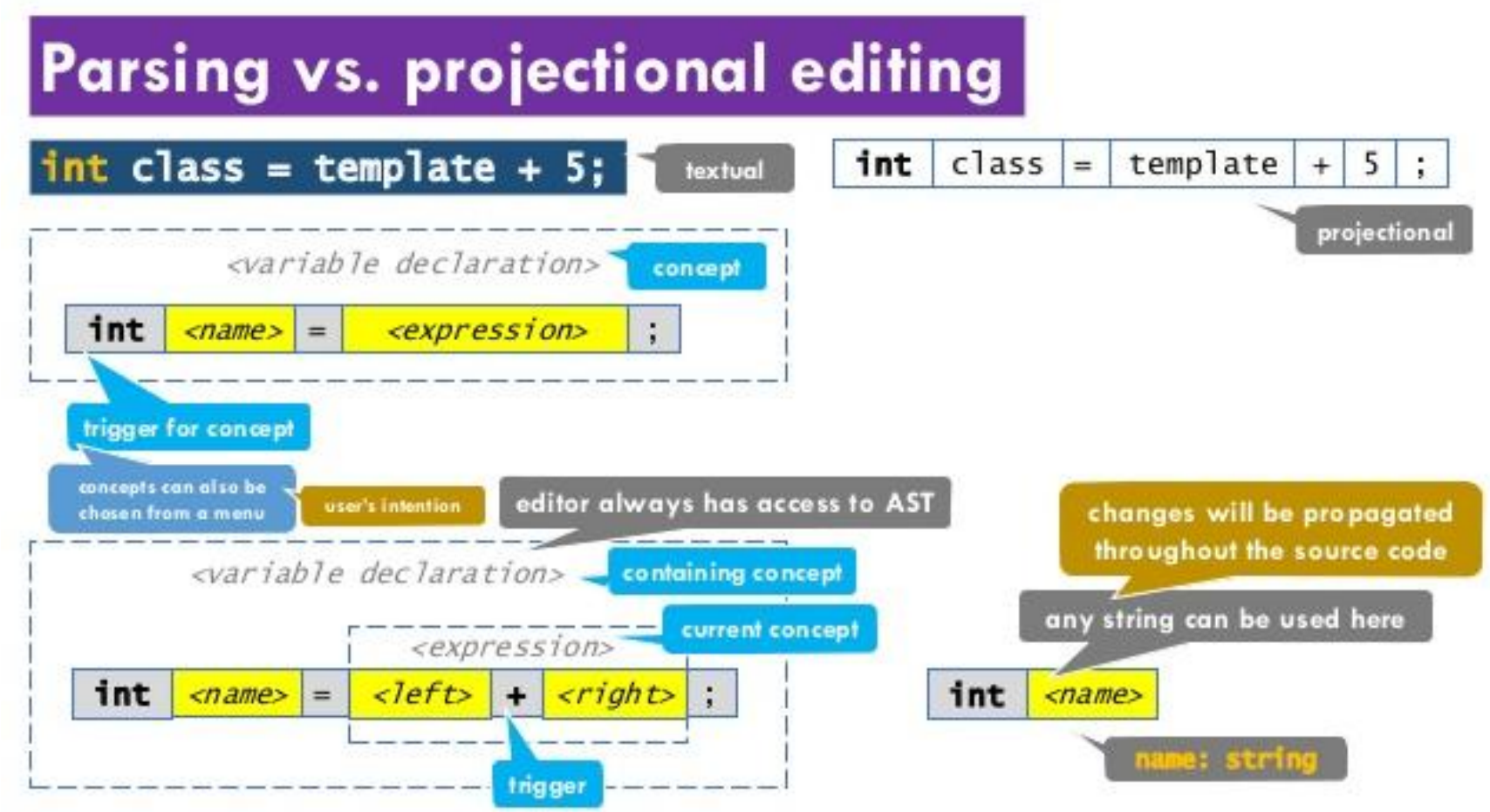

Source: Mikhail Barash: Reflections on teaching JetBrains MPS within a university course

PROJECTIONAL EDITORS – GENTLEMAN

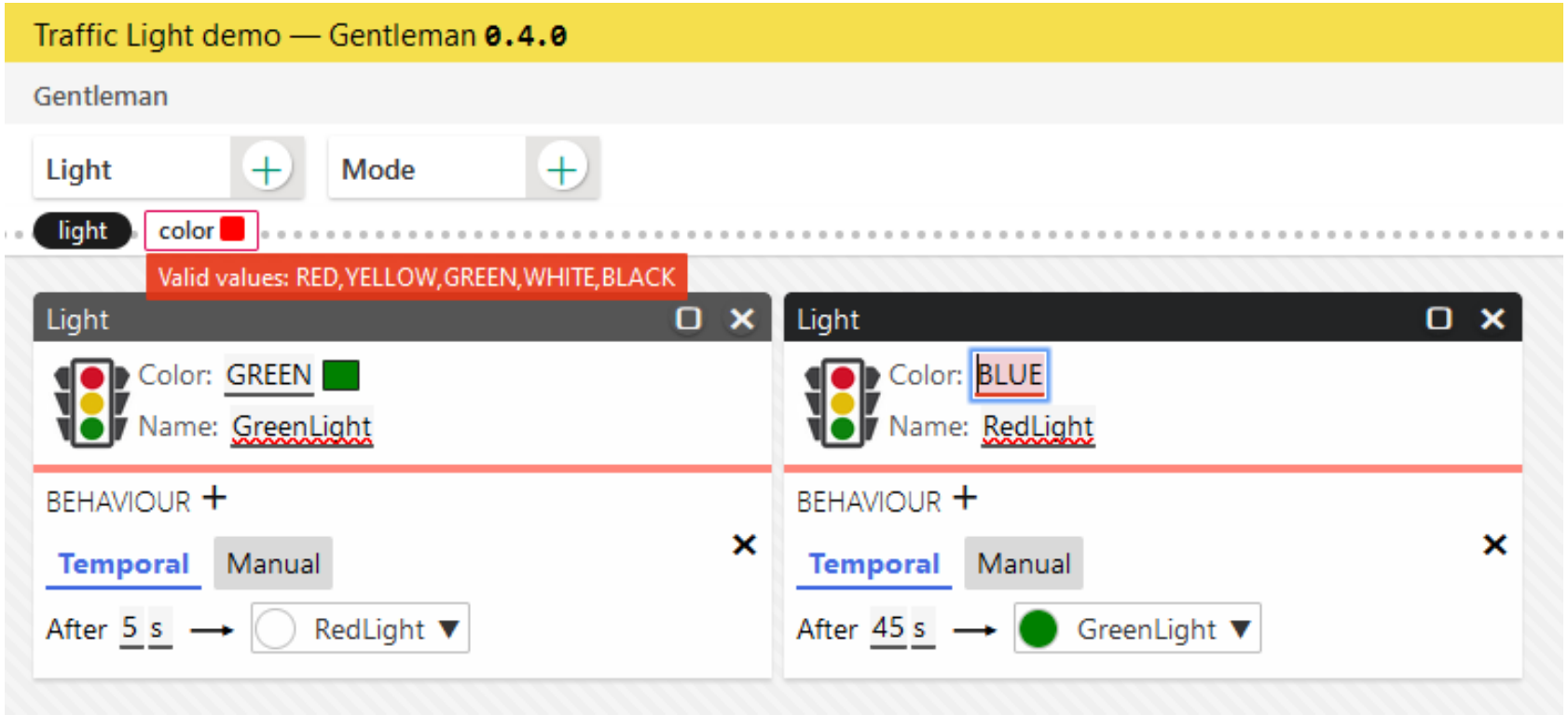

Source: https://geodes.iro.umontreal.ca/gentleman/demo/traffic-light/index.html

THANK YOU FOR YOUR ATTENTION!